PMV100

Universal Projector Ceiling Mount 4 fixing points



The reliable and robustly crafted PMV100 projector mount is the basis for any properly made audiovisual installation. The handle is characterized by a load capacity adapted to the weight of the device and protection against accidental falling out. It ensures that the projector is positioned in relation to the projection screen, so that the displayed image is of the best quality. The handle is characterized by precise and convenient adjustment of the distance to the ceiling and the possibility of hiding the wiring through the integrated cable management system. An indisputable advantage of the handle is modern design and aesthetics of workmanship, thanks to which it works great in the most prestigious interiors.

FEATURES:

- Modern Design with a high-end finish
- Aluminum construction with a semi-textured powder coat or anodized finish
- Ceiling plate covers to hide fixings included Micro-Adjustment mechanism ensures precise installation
- Universal for all key projectors with multiple fixing points
- Distance from ceiling to projector from 475 mm to 650 mm
- Internal cable management in tube 50° horizontal adjustment





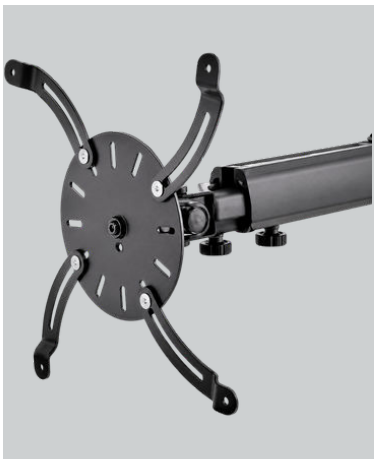



PRODUCT SPECIFICATIONS

Short index	PMV100
Category	Projector Mounts
Colour	Black
Warranty	Limited 5-years
Maximum load	30 kg
Forward tilting	-7,5°/+7,5°
Height adjustment	yes

sales@edbak.com
+48 81 562 81 19

TECHNICAL SPECIFICATIONS

Product dimensions	W: 180 mm D: 180 mm H: 475 mm (W:7,08" D:7,08" H:18,70")
Product weight	3,5 kg (7,71 lb)
Max. distance from mounting surface	650 mm (22,59")
Min. distance from mounting surface	475 mm (18,70")
Max. mounting pattern	420 mm (16,54")
Min. mounting pattern	50 mm (1,96")

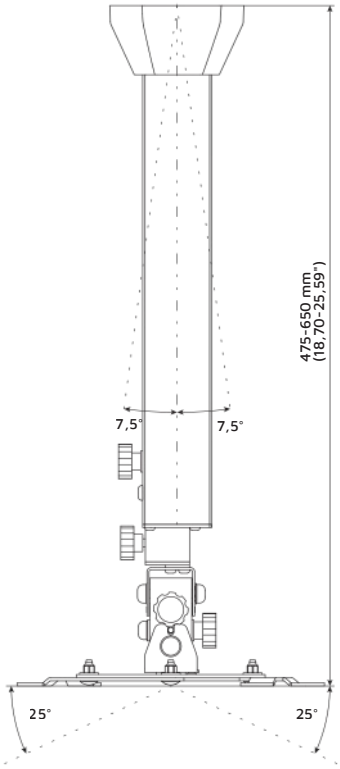

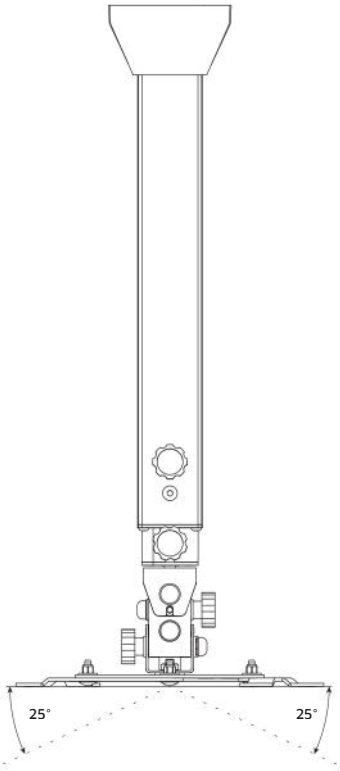

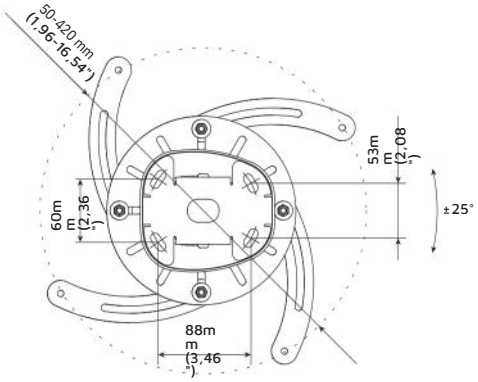

LOGISTICS DATA

SAP INDEX	EAN CODE	COLOUR	PACKAGE DIMENSIONS	PACKAGE WEIGHT
WUSU-PMV100	5902841112117	BLACK	660 x 210 x 160 mm 25,98 x 8,26 x 6,29”	4,1 kg 9,03 lb

HS Code (Harmonized System): 732690, HTS Code (Harmonized Tariff Schedule): 7326909890, Country of Origin: Poland

© 2021 EDBAK Sp. z o.o. All rights reserved.
The information contained in this specification reflects the current technical data at the time of publication. EDBAK Sp. z o.o. reserves the right to modify technical specifications and product parameters without prior notice. The EDBAK name and EDBAK logo are registered trademarks of EDBAK Sp. z o.o. All EDBAK photographs, graphics and symbols are the exclusive property of EDBAK Sp. z o.o. EDBAK Sp. z o.o. shall not be held liable for any loss or damage resulting from improper installation or mounting of the product. Reproduction of this specification, in whole or in part, is permitted only with the prior written consent of EDBAK Sp. z o.o.