STDV100

Flat screen stand for 45" - 75" screens

It is a perfect solution for presenting the screen in an elegant and, at the same time, safe manner. STDV100 is universal and, due to its wide range of height adjustments, it can easily be adapted to many types of screens available on the market. A solid and stable base with the possibility of attachment to the floor makes it perfect for various rooms from hotel lobbies to conference rooms. Integrated cable management makes the finished installation neat and tidy, and as such STDV100 is perfect for professional or commercial applications.

FEATURES:

- Universal VESA mount suitable for multiple screen types
- Full height adjustment
- Stable base
- Base holes allow optional fastening to the floor using anchors
- Integrated cable management system

40"-75" | 100x100 600x400 | 11° | 80 kg | RoHS Compliant

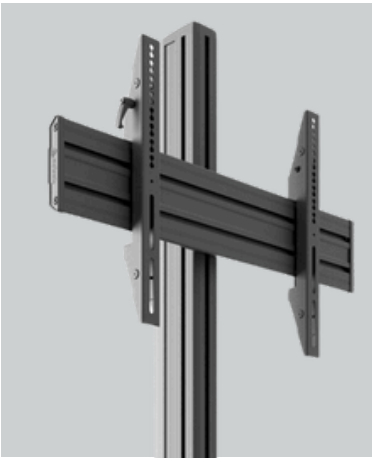

PRODUCT SPECIFICATIONS

Short index	STDV100
Category	Trolleys & Stands
Product group	Stands
Colour	Black
Warranty	Limited 5-years
Number of screens	1
Minimum screen size	40"
Maximum screen size	75"
Maximum load	80 kg
Forward tilting	+11°
Height adjustment	Yes
VESA Mounting Compatibility	100x100 up to 600x400

sales@edbak.com
+48 81 562 81 19

TECHNICAL SPECIFICATIONS

Product dimensions	W: 720 mm D: 435 mm H: 1830 mm (W:28,34" D:17,12" H:72,04")
Product weight	33,31 kg (73,43 lb)
Min. distance from the floor to the center of the screen	250 mm (9,84")
Max. distance from the floor to the center of the screen	1650 mm (64,96")
Min. mounting pattern	50 mm x 96 mm (1,96 x 3,77")
Max. mounting pattern	750 mm x 460 mm (29,52 x 18,11")

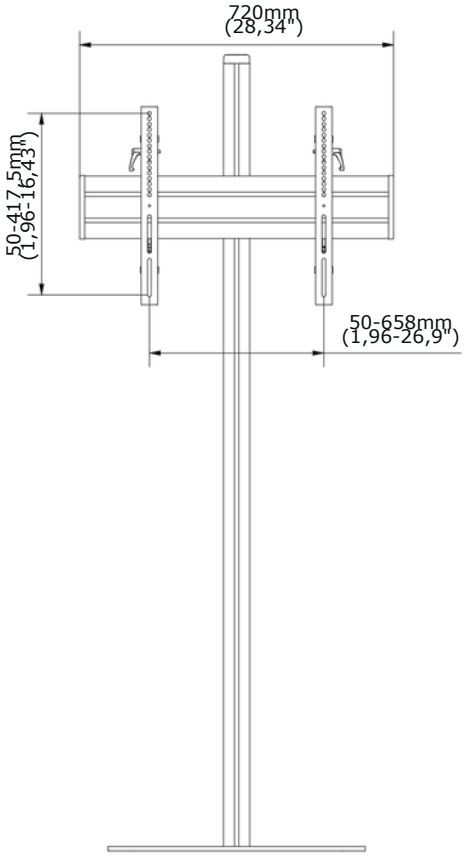

FRONT VIEW

SIDE VIEW

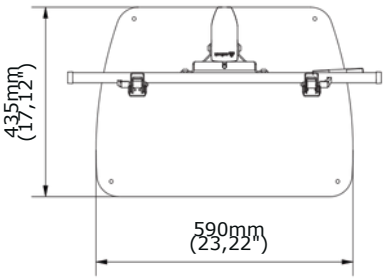

TOP VIEW

LOGISTICS DATA

SAP INDEX	EAN CODE	COLOUR	PACKAGE DIMENSIONS	PACKAGE WEIGHT
WSTD-STDV100	5902841138858	BLACK	1750 x 510 x 230 mm 68,89 x 20,07 x 9,05"	35 kg 77,16 lb

HS Code (Harmonized System): 732690, HTS Code (Harmonized Tariff Schedule): 7326909890, Country of Origin: Poland

2021 – EDBAK Sp. z o.o. All rights reserved. The information included in the specification reflects the current technical specifications at the time of printing. We reserve the right to modify technical or physical specifications without prior notice. EDBAK name and EDBAK logo are registered trademarks of EDBAK Sp. z o.o. All EDBAK images and symbols are sole property of EDBAK Sp. z o.o. Edbak shall not be held liable for any loss or damage caused by incorrect installation or mounting. Copying this specification in whole or in part is only allowed after obtaining written consent from EDBAK Sp. z o.o.
WWTR-TRV100-210601-EN